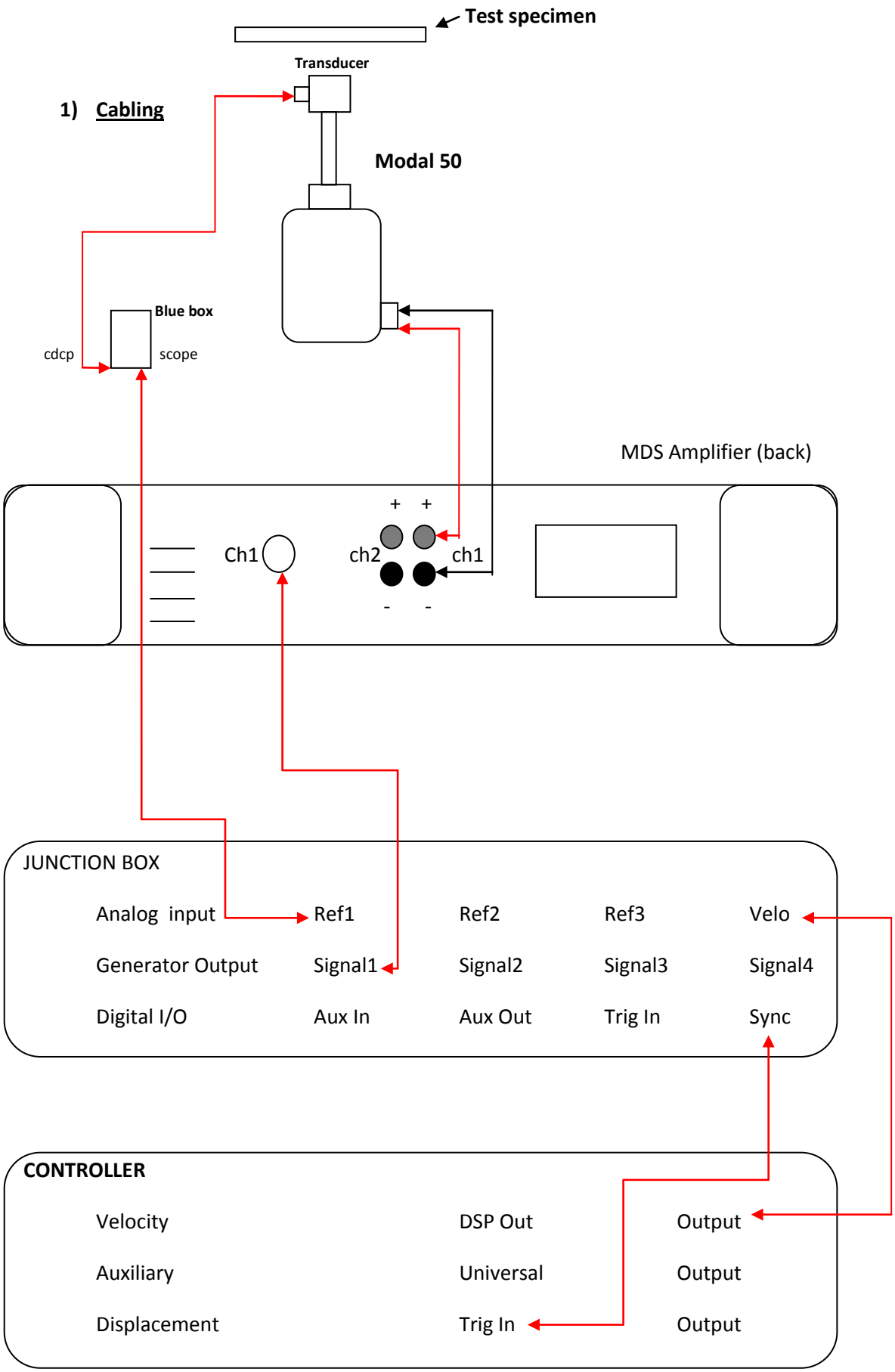PSV400 – Typical setup for Actuator/Generator