PSV400 – Typical setup for Speaker/Generator

1) Cabling

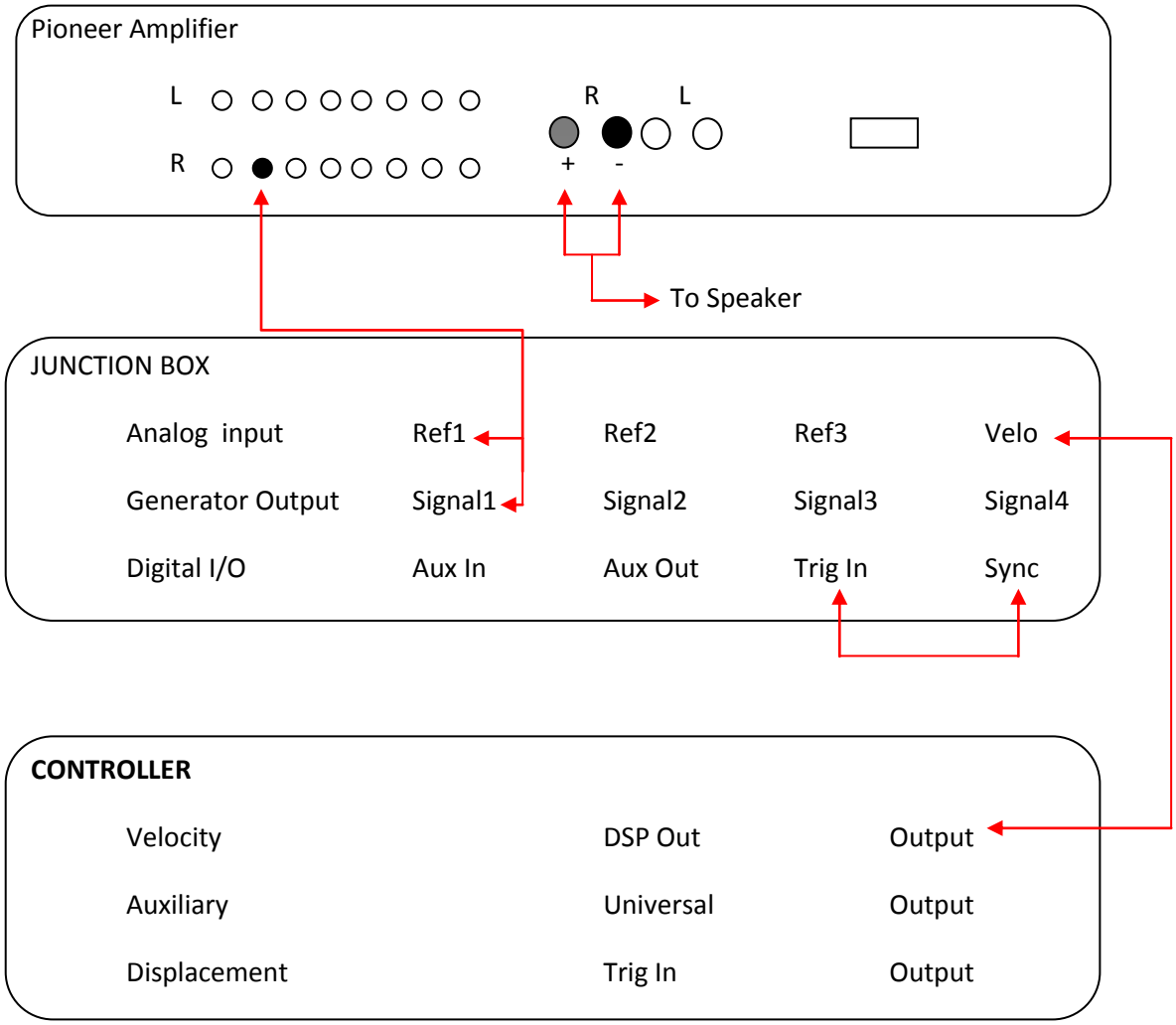

2) AD Setup

General

Measuring Mode	Averaging	
FFT	● Complex	~5

Channels

Channel	Active	Index	Direction	Range	Impedance	Quantity	Factor	Unit
Vibrometer	■		+Z	10V	1MOhm	Velocity	1	mm/s/V
Refeference 1	■		+Z	10V	1MO	Velocity	~0.001	mm/s/V

Filters

Channel	Filter type	Definition	Int/Diff Qauntity
Vibrometer	No Filter	**Cutoff freq. 10**	Velocity (0)
Reference	No Filter	-	Velocity (0)

Frequency

Bandwidth	0.002	**Sample freq.**	5.12 Hz
From	0	**Sample time**	400 ms
To	0.002	**Resolution**	2.5 Hz
FFT Lines	800		

Window

Channel	Function	Parameter
Vibrometer	Rectangular	
Reference 1	Rectangular	

Trigger

Source	● **Rising**	○	**Falling**
Off	**Level**		~5
● **External (TTL)**	**Pre-trigger**		0
Analog	**Pre-trigger**		0 s
Reference 1			

SE

Channel		**Speckle Tracking**		☐
Vibrometer	■			
Reference 1	■	Fast	**Standard**	Best

Vibrometer

Tune up when "vibration overload"

Velocity	VD-07 1mm/s/V	**Max freq.**	20 kHz
Displacement	DD-300 (Aux) 50 Nm/V	**Max freq.**	20 MHz
Tracking filter	Off		
Lowpass filter	Off	1 % A	atenuation at: 3MHz
Highpass filter	Off		

Generator

■ **Active**

Waveform		**Wait for Steadystate**
Periodic Chirp		1s
Amplitude	**Offset**	**Frequency**
1	0	~3100
☐ **Limit signal**		**Min** **Max**
		-10V 10V